Electrolux

Modular Cooking Range Line 900XP Gas Bratt Pan 80lt with mild steel bottom

ITEM # _____

MODEL # _____

NAME # _____

SIS # _____

AIA # _____

Modular Cooking Range Line

900XP Gas Bratt Pan 80lt with mild steel bottom

391134 (E9BRGHMOF0)	900XP Gas Bratt Pan – 80 liter with mild steel bottom

Short Form Specification

Item No. _____

Suitable for natural gas or LPG. Burners in chrome plated steel with flame failure device. Polished mild steel plated cooking surface for roasting, To be installed on stainless steel feet with height adjustment up to 50 mm and can be installed on cantilever systems. Includes mechanism to manually tilt the pan and double-skinned lid in stainless steel. Cooking temperature can be set through thermostat and the energy input through an energy regulator.

Exterior panels of unit in stainless steel with Scotch Brite finish. Right-angled side edges to allow flush-fitting junction between units.

APPROVAL: _____

Main Features

- Double–skin well and lid to reduce heat dispersion.
- Burners built-in the base of well move together during tilting to facilitate cleaning operations.
- Lid is double-lined, insulated in 20/10 Stainless steel.
- IPX5 water resistance certification.
- Actual cooking temperature setting through adjustable thermostat.
- Working temperature can be set from 120 °C to 300 °C.
- Energy input controlled by energy regulator.
- Heat-insulated: limited heat radiation and low energy consumption.
- Manual tilting mechanism to facilitate pan emptying.
- Smooth large surfaces, easy access for cleaning.
- The special design of the control knob system guarantees against water infiltration.
- Unit to be mounted on stainless steel feet with height adjustment up to 50 mm. Unit can be easily mounted on cantilever systems.

Construction

- Cooking surface in mild steel for sautéing, poaching, steaming, boiling, stewing and regular frying.
- Burners in chrome plated steel with flame failure device, optimized combustion and piezo ignition with electronic flame control.
- All pan internal surfaces round and polished.
- Exterior panels in Stainless Steel with Scotch Brite finish.
- Model has right-angled side edges to allow flush fitting joints between units, eliminating gaps and possible dirt traps.

Optional Accessories

• Matching ring for flue condenser, 150 mm diameter	PNC 206133 ❑
• Flanged feet kit	PNC 206136 ❑
• Pair of side kicking strips (not for refr-freezer base)	PNC 206180 ❑
• 2 panels for service duct for single installation	PNC 206181 ❑
• 2 panels for service duct for back to back installation	PNC 206202 ❑
• Pressure regulator for gas units	PNC 927225 ❑

Electrolux

Modular Cooking Range Line 900XP Gas Bratt Pan 80lt with mild steel bottom

Modular Cooking Range Line 900XP Gas Bratt Pan 80lt with mild steel bottom

Front

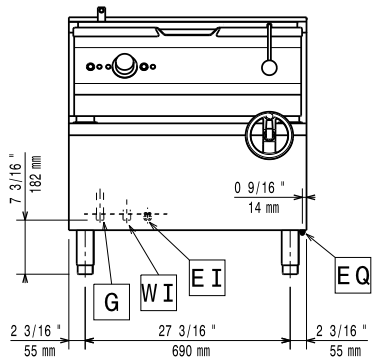

Top

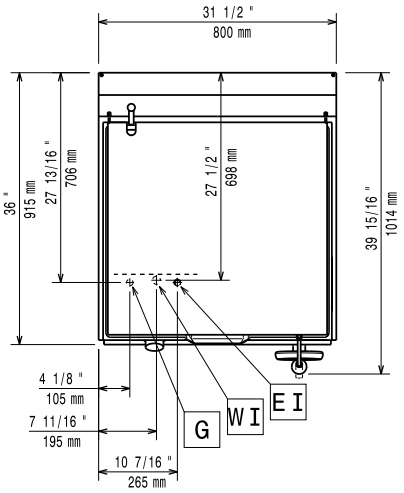

CWI = Cold Water inlet
EI = Electrical connection
G = Gas connection

Side

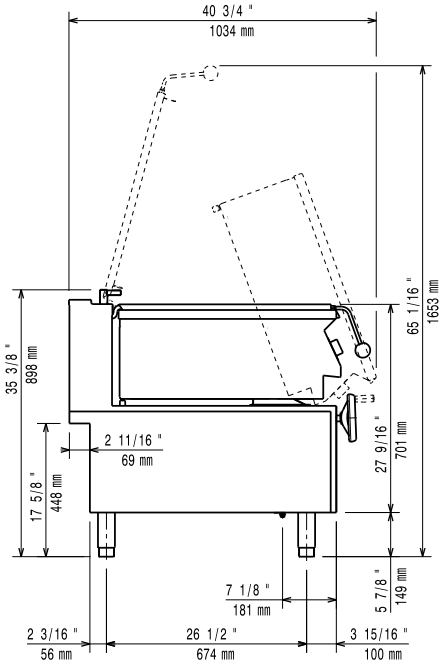

Electric

Supply voltage:	
391134(E9BRGHMOF0)	230 V/1N ph/50/60 Hz
Total Watts:	0.25 kW

Gas

Gas Power:	68180 Btu/hr (21 kW)
Gas Type Option:	LPG;Natural Gas
Gas Inlet:	1/2" NPT
Natural gas - Pressure:	7" w.c. (17.4 mbar)
LPG Gas Pressure:	11" w.c. (27.7 mbar)

Key Information:

Cooking Surface Depth:	565 mm
Cooking Surface Width:	680 mm
Cooking Well Height:	130 mm
Well Capacity, Max:	80 lt
Working Temperature MIN:	120 °C
Working Temperature MAX:	300 °C
Net weight:	150 kg
Shipping weight:	159 kg
Shipping height:	850 mm
Shipping width:	800 mm
Shipping depth:	930 mm
Shipping volume:	0.62 m³

No clearance needed on rear sides of unit if wall is of non combustible type. If wall is combustible, minimum 50 mm wall clearance should be maintained.

The company reserves the right to make modifications to the products without prior notice. All information correct at time of printing.