Product Details

Electrical Connection	: 15 Amp Plug & Lead (supplied)
Electrical Rating	: 240v, 2400w,
	: 4 elements @ 600w
Waste	: 13mm with 19mm drain and 1/2" BSP mini cistern cock
Unit Controls	: Switch for main power
	: Thermostat with dial thermometer

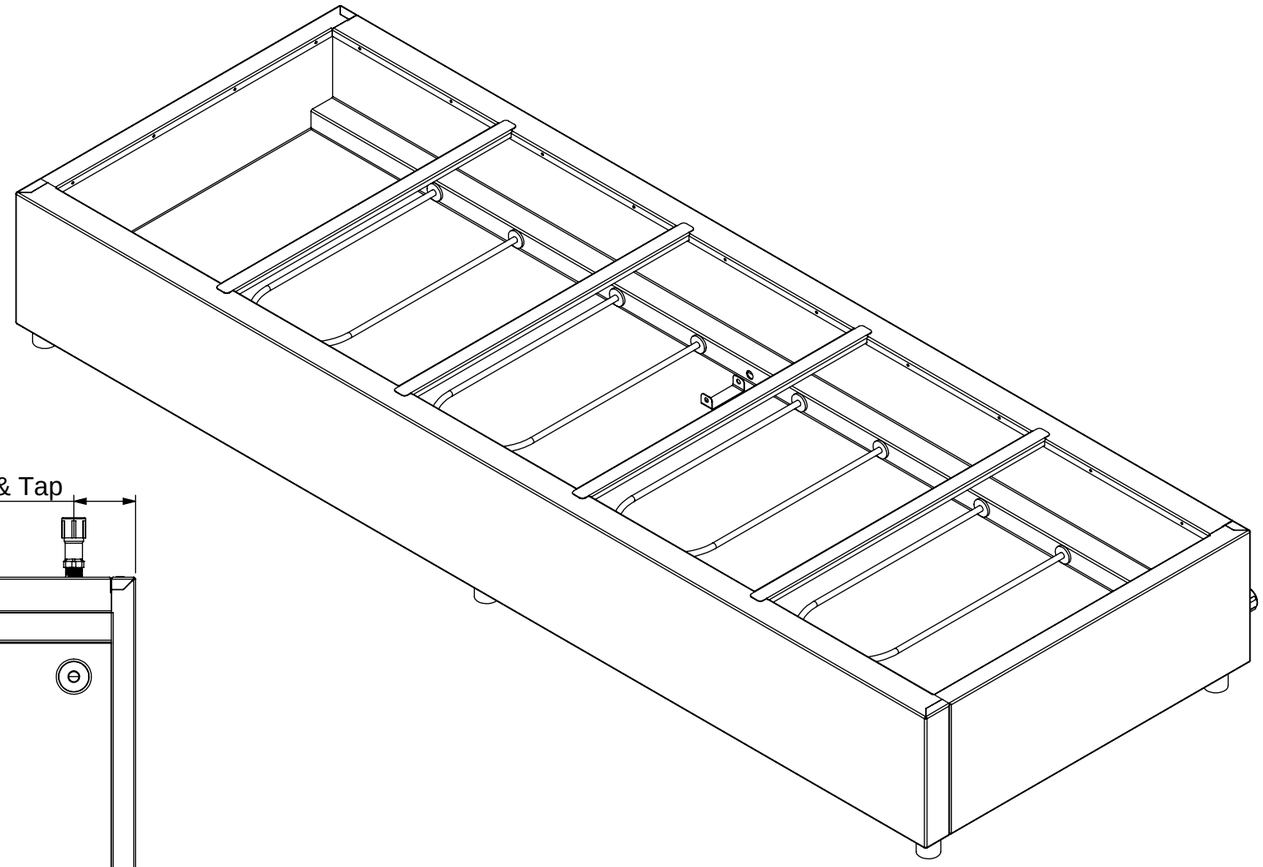

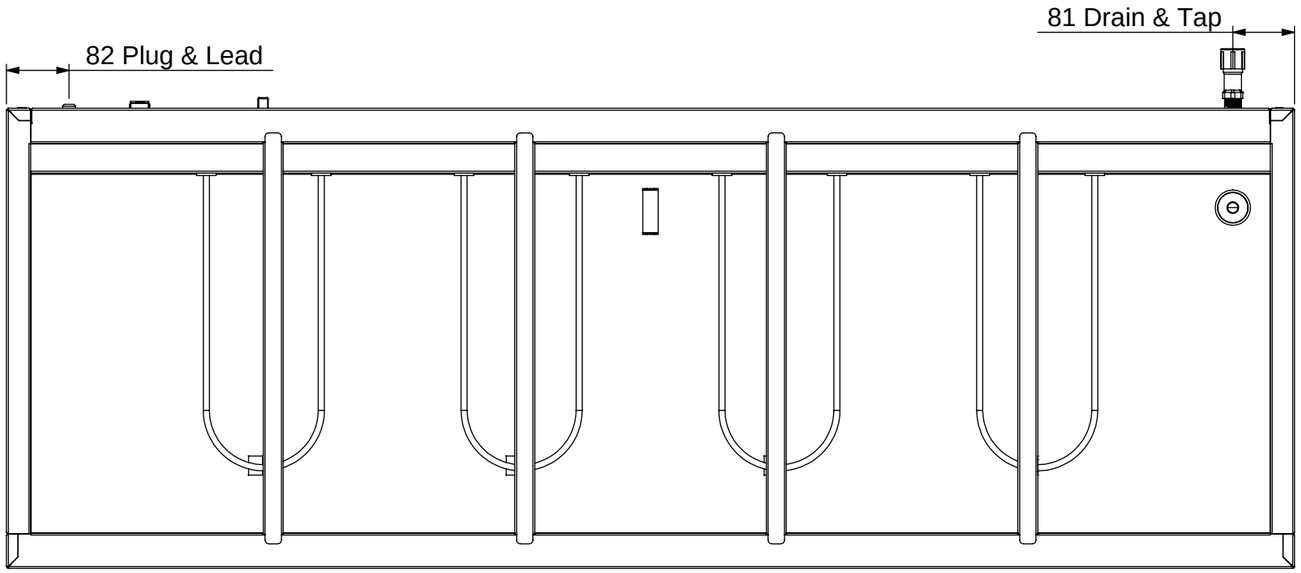

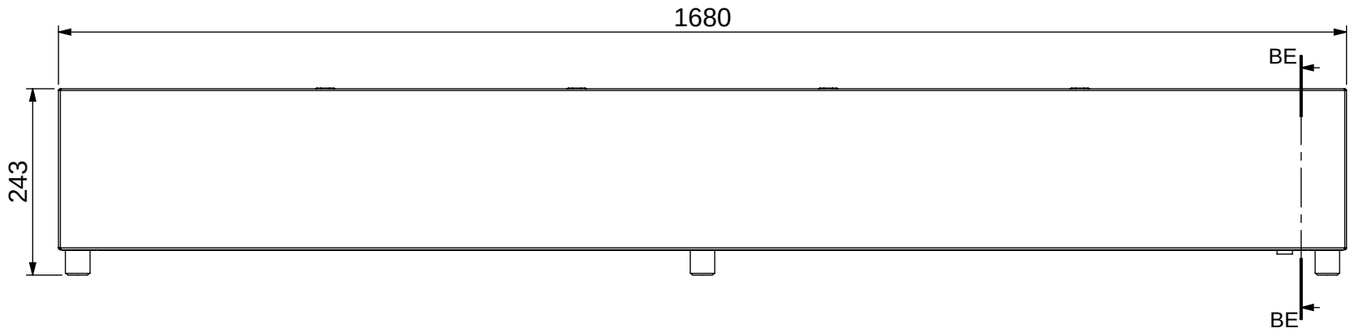

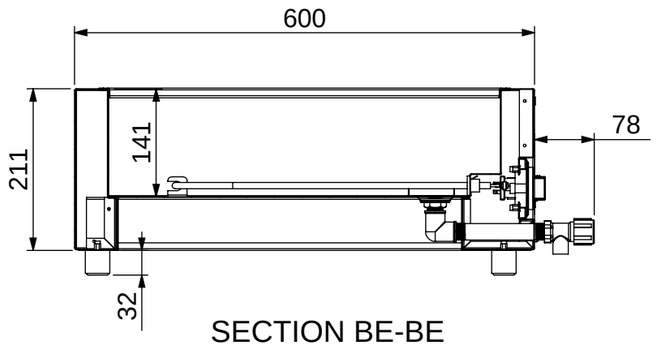

SECTION BE-BE

STODDART
MANUFACTURING
TOM STODDART Pty Ltd
ACN 009 690 251
www.stoddart.com.au

	NAME	SIGNATURE	DATE	UNLESS OTHERWISE SPECIFIED: DIMENSIONS ARE IN MILLIMETERS
DRAWN	N Wooler		3/08/2004	
APPV'D				MATERIAL:
Weight:				THICKNESS:
Surface Area:				FINISH:
DO NOT SCALE DRAWING				

PART No: **WBMA25-A001**

DESCRIPTION: **5 Bay Bain Marie**

DWG No: **WBMA25-D001**

Dwg. Issue **1**

This drawing remains the property of Tom Stoddart Pty Ltd & cannot be reproduced without prior permission.

A3

File Location: F:\ 08_Food Service Equipment\ 03_Engineering - FSE\ 01_Stoddart Standard Products\ Woodson\ WBMA2x Large Bain Marie\ 01_Solidworks\ WBMA25\